19-1219; Rev 1; 6/97

EVALUATION KIT MANUAL AVAILABLE

MAXIM

28V, Low-Power, High-Voltage, Boost or Inverting DC-DC Converter

General Description

The MAX629 low-power DC-DC converter features an internal N-channel MOSFET switch and programmable current limiting. It is designed to supply positive or negative bias voltages up to ±28V from input voltages in the 0.8V to V_{OUT} range, and can be configured for boost, flyback, and SEPIC topologies.

The MAX629's current-limited pulse-frequency-modulation (PFM) control scheme provides high efficiency over a wide range of load conditions. An internal, 0.5A N-channel MOSFET switch reduces the total part count, and a high switching frequency (up to 300kHz) allows for tiny surface-mount magnetics.

The MAX629's combination of low supply current, logic-controlled shutdown, small package, and tiny external components makes it an extremely compact and efficient high-voltage biasing solution that's ideal for battery-powered applications. The MAX629 is available in an 8-pin SO package.

Applications

Positive or Negative LCD Bias Generators

High-Efficiency DC-DC Boost Converters

Varactor Tuning Diode Bias

Palmtop Computers

2-Cell and 3-Cell Battery-Powered Applications

Features

- **Internal, 500mA, 28V N-Channel Switch (No External FET Required)**
- **Generates Positive or Negative Output Voltages**
- **80µA Supply Current**
- **1µA Max Shutdown Current**
- **Up to 300kHz Switching Frequency**
- **Adjustable Current Limit Allows Use of Small, Inexpensive Inductors**
- **8-Pin SO Package**

Ordering Information

PART	TEMP. RANGE	PIN-PACKAGE
MAX629C/D	0°C to +70°C	Dice*
MAX629ESA	-40°C to +85°C	8 SO

**Dice are tested at T_A = +25°C, DC parameters only.*

Note: To order tape-and-reel shipping, add "-T" to the end of the part number.

Pin Configuration appears at end of data sheet.

Typical Operating Circuit

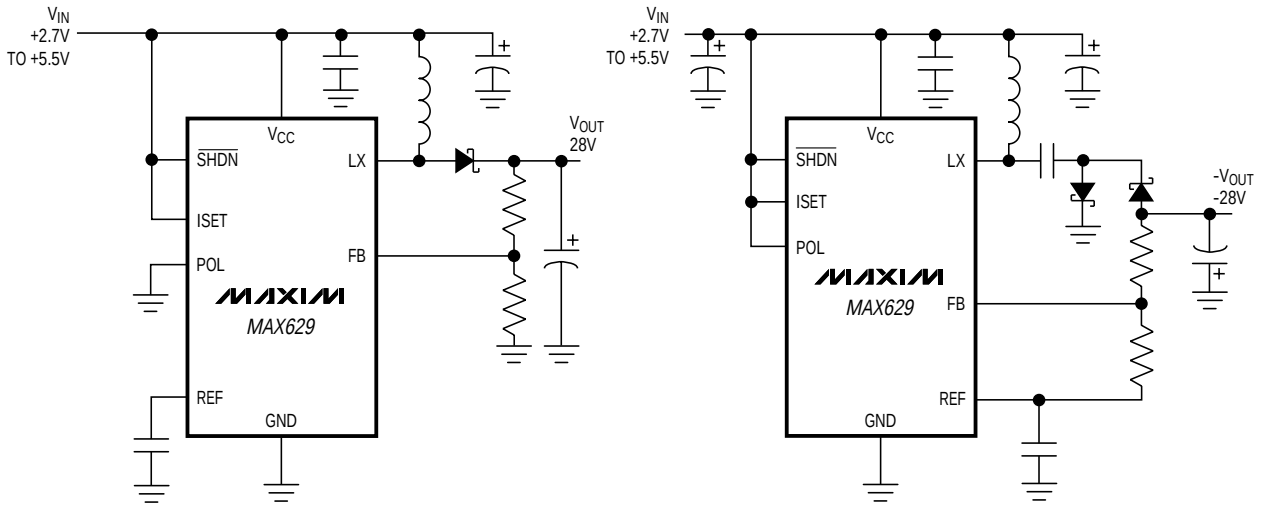

POSITIVE OUTPUT VOLTAGE **NEGATIVE OUTPUT VOLTAGE**

For free samples & the latest literature: http://www.maxim-ic.com, or phone 1-800-998-8800

28V, Low-Power, High-Voltage, Boost or Inverting DC-DC Converter

ABSOLUTE MAXIMUM RATINGS

Supply Voltage (V_{CC} to GND) .....-0.3V to +6V
$\overline{SHDN}$ to GND.....-0.3V to +6V
ISET, REF, FB, POL to GND .....-0.3V to (V_{CC} + 0.3V)
LX to GND .....-0.3V to +30V
Continuous Power Dissipation (T_A = +70°C)
SO (derate 5.88mW/°C above +70°C).....471mW

Operating Temperature Range .....-40°C to +85°C
Junction Temperature.....+150°C
Storage Temperature Range .....-65°C to +165°C
Lead Temperature (soldering, 10sec) .....+300°C

Stresses beyond those listed under "Absolute Maximum Ratings" may cause permanent damage to the device. These are stress ratings only, and functional operation of the device at these or any other conditions beyond those indicated in the operational sections of the specifications is not implied. Exposure to absolute maximum rating conditions for extended periods may affect device reliability.

ELECTRICAL CHARACTERISTICS

(V_{CC} = +5V, C_{REF} = 0.1µF, T_A = -40°C to +85°C, unless otherwise noted. Typical values are at T_A = +25°C.) (Note1)

PARAMETER	CONDITIONS		MIN	TYP	MAX	UNITS
V_{CC} Input Voltage (Note 2)			2.7		5.5	V
V_{CC} Supply Current	V_{FB} = 1.3V			80	120	µA
V_{CC} Shutdown Current	$\overline{SHDN}$ = GND			0.04	1	µA
V_{CC} Undervoltage Lockout	100mV hysteresis		2.3	2.5	2.65	V
Input Supply Voltage (Note 2)	Voltage applied to L1 (V_{IN})		0.8		$\lvert V_{OUT} \rvert$	V
$\overline{SHDN}$, POL, ISET Logic Levels	V_{IH}		2.4			V
	V_{IL}				0.4	
Positive Output Voltage	Circuit of Figure 2				28	V
Negative Output Voltage	Circuit of Figure 3		$-\lvert V_{IN} \rvert$		-28	V
LX Switch-Current Limit	ISET = V_{CC}		0.39	0.45	0.51	A
	ISET = GND		0.20	0.25	0.33	
LX On-Resistance	V_{CC} = 5V			0.6	1.2	Ω
	V_{CC} = 3.3V			0.7	1.4	
LX Leakage Current	V_{LX} = 28V, T_A = +85°C			0.05	2.5	µA
Maximum LX On-Time			6.5	8.5	10.0	µs
Minimum LX Off-Time	POL = GND		0.7	1.0	1.3	µs
	POL = V_{CC}		2.0	3.2	3.8	
	POL = GND, V_{FB} < 1V		3.0	4.5	6.0	
	POL = V_{CC}, V_{FB} > 0.25V		3.0	4.5	6.0	
FB Set Point	POL = GND (positive output)	T_A = 0°C to +85°C	1.225	1.250	1.275	V
		T_A = -40°C to +85°C	1.218		1.282	
	POL = V_{CC} (negative output)	T_A = 0°C to +85°C	-15	0	15	mV
		T_A = -40°C to +85°C	-25		25	
FB Input Bias Current				5	50	nA
REF Output Voltage	V_{CC} = 2.7V to 5.5V, no load on REF	T_A = 0°C to +85°C	1.225	1.250	1.275	V
		T_A = -40°C to +85°C	1.218		1.282	

ELECTRICAL CHARACTERISTICS (continued)

(V_{CC} = +5V, C_{REF} = 0.1µF, T_A = -40°C to +85°C, unless otherwise noted. Typical values are at T_A = +25°C.) (Note 1)

PARAMETER	CONDITIONS	MIN	TYP	MAX	UNITS
REF Load Regulation	I_{REF} = 0µA to 100µA, C_{REF} = 0.47µF (Note 3)		10	25	mV
Line Regulation	Circuit of Figure 2, V_{OUT} = 24V, V_{CC} = 3V to 5.5V, I_{LOAD} = 5mA		0.2		%/V
Load Regulation	Circuit of Figure 2, V_{OUT} = 24V, V_{CC} = 5V, I_{LOAD} = 0mA to 5mA		0.15		%
Thermal Shutdown Threshold	Die temperature		150		°C

Note 1: Specifications to -40°C are guaranteed by design and not production tested.
Note 2: The IC itself requires a supply voltage between +2.7V and +5.5V; however, the voltage that supplies power to the inductor can vary from 0.8V to 28V, depending on circuit operating conditions.
Note 3: For reference currents less than 10µA, a 0.1µF reference-bypass capacitor is adequate.

Typical Operating Characteristics

($\overline{SHDN}$ = V_{CC} , C_{REF} = 0.1µF, T_A = +25°C, unless otherwise noted.)

EFFICIENCY vs. LOAD CURRENT (V_{OUT} = +24V)

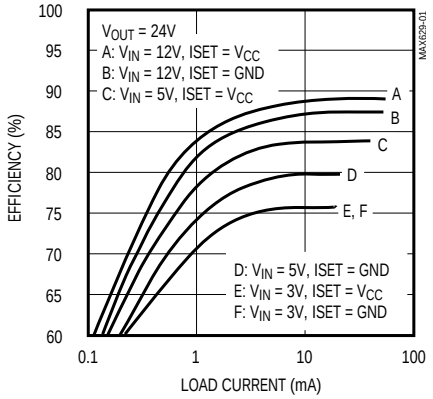

EFFICIENCY vs. LOAD CURRENT (V_{OUT} = +12V)

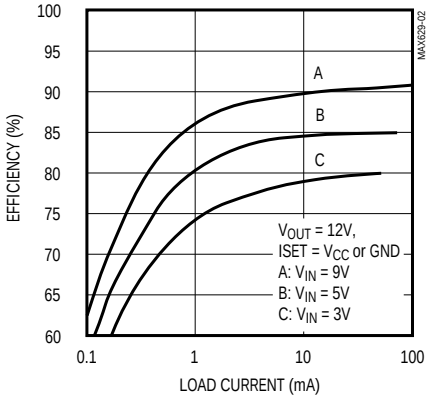

MAXIMUM LOAD CURRENT vs. INPUT VOLTAGE (V_{OUT} = +24V, +12V)

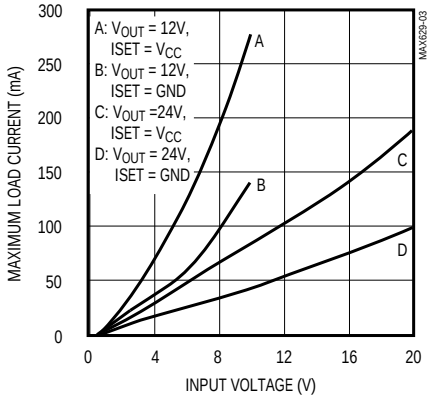

EFFICIENCY vs. LOAD CURRENT (V_{OUT} = -18V)

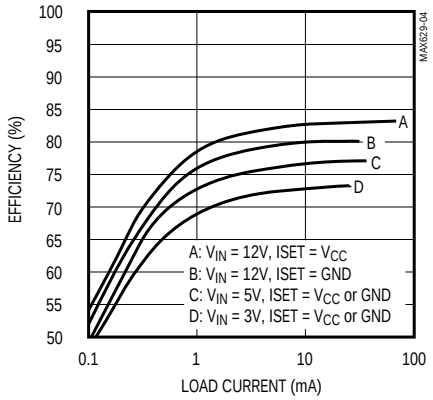

EFFICIENCY vs. LOAD CURRENT (V_{OUT} = -12V)

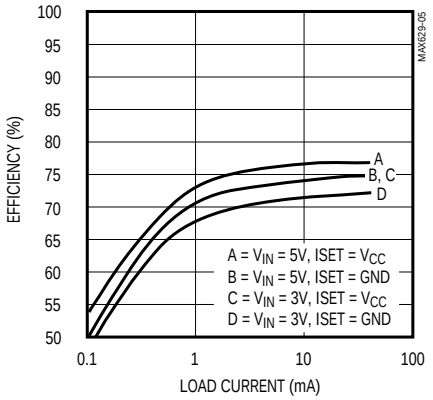

MAXIMUM LOAD CURRENT vs. INPUT VOLTAGE (V_{OUT} = -18V, -12V)

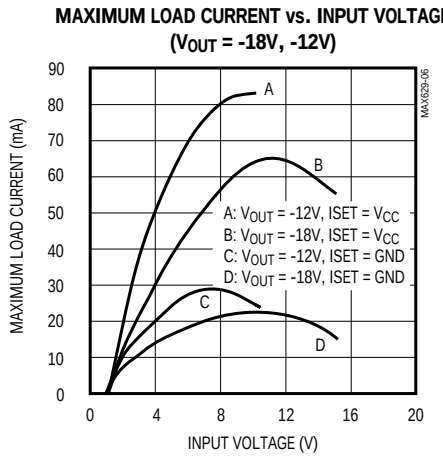

28V, Low-Power, High-Voltage, Boost or Inverting DC-DC Converter

Typical Operating Characteristics (continued)

($\overline{SHDN}$ = V_{CC} , C_{REF} = 0.1µF, T_A = +25°C, unless otherwise noted.)

SUPPLY CURRENT vs. INPUT VOLTAGE

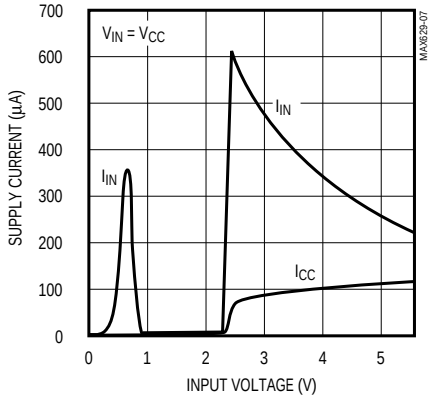

REFERENCE VOLTAGE vs. REFERENCE LOAD CURRENT

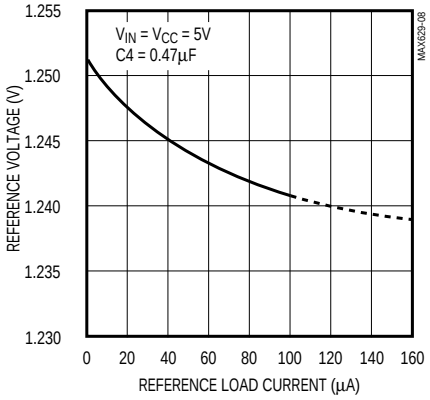

OUTPUT VOLTAGE RIPPLE

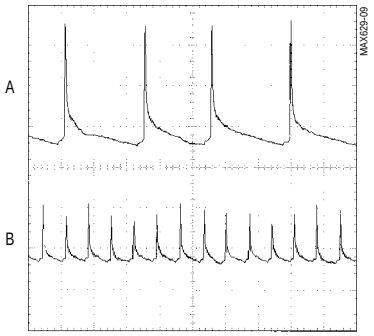

VOUT = +24V, ILOAD = 5mA
A: ISET = VCC, 20mV/div
B: ISET = GND, 20mV/div

LOAD-TRANSIENT RESPONSE (ISET = VCC, ILIM = 500mA)

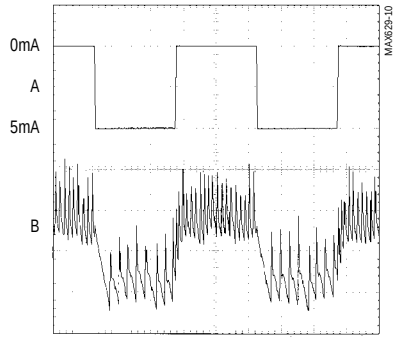

VOUT = +24V, ISET = VCC
A: LOAD CURRENT, 0mA TO 5mA, 2.5mA/div
B: VOUT, AC-COUPLED, 10mV/div

LOAD-TRANSIENT RESPONSE (ISET = GND, ILIM = 250mA)

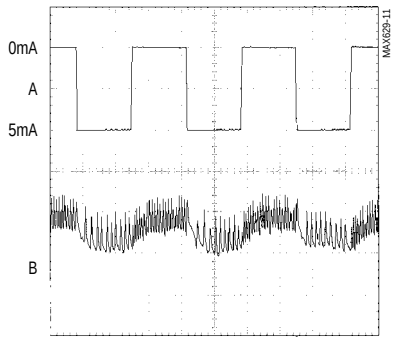

VOUT = +24V, ISET = GND
A: LOAD CURRENT, 0mA TO 5mA, 2.5mA/div
B: VOUT, AC-COUPLED, 10mV/div

SHUTDOWN TRANSIENT (POSITIVE CONFIGURATION)

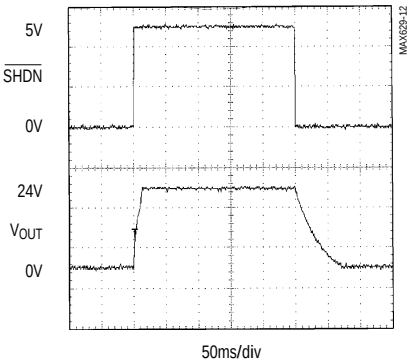

VCC = VIN = 5V, RL = 4kΩ

SHUTDOWN TRANSIENT (NEGATIVE CONFIGURATION)

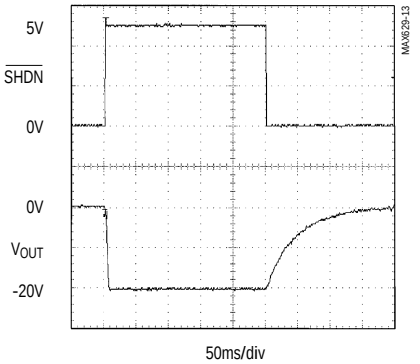

VCC = VIN = 5V, RL = 4kΩ

Pin Description

PIN	NAME	FUNCTION
1	$\overline{SHDN}$	Active-Low Shutdown Input. A logic low puts the MAX629 in shutdown mode and reduces supply current to 1µA.
2	POL	Polarity Input. Changes polarity and threshold of FB to allow regulation of either positive or negative output voltages. Set POL = GND for positive output voltage, or set POL = V_{CC} for negative output voltage.
3	REF	1.25V Reference Output. Bypass to GND with a 0.1µF capacitor for $I_{REF} \leq 10µA$. REF can source 100µA to drive external loads. For $10µA \leq I_{REF} \leq 100µA$, bypass REF with a 0.47µF capacitor.
4	FB	Feedback Input for setting output voltage. Connect to an external voltage divider. See *Setting the Output Voltage.*
5	ISET	Current-Limit Set Input. Connect to V_{CC} for a 500mA LX current limit, or connect to GND for a 250mA LX current limit. See *Setting the Current Limit.*
6	GND	Ground
7	LX	Internal N-Channel DMOS Switch Drain
8	V_{CC}	Power-Supply Input

Detailed Description

The MAX629 low-power, boost DC-DC converter provides either positive or negative output voltages up to ±28V from a wide range of input voltages. It is designed primarily for use in low-power, high-voltage applications such as LCD biasing and set-top box varactor tuning. The MAX629's unique control scheme provides high efficiency and a wide range of output voltages with only 80µA quiescent supply current, making it ideal for battery-powered applications. The internal N-channel DMOS switch has a pin-programmable current limit (250mA and 500mA), allowing optimization of output current and component size. Figure 1 shows the MAX629 functional diagram.

Control Scheme

A combination of peak-current limiting and a pair of one-shots controls the MAX629 switching, determining the maximum on-time and constant off-time. During the on-cycle, the internal switch closes, and current through the inductor ramps up until either the fixed 10µs maximum on-time expires (at low input voltages) or the switch's peak current limit is reached. The peak switch current limit is selectable to either 500mA (ISET = V_{CC}) or 250mA (ISET = GND) (see *Setting the Current Limit*). After the on-cycle terminates, the switch turns off, charging the output capacitor through the diode. In normal operation, the minimum off-time is set to 1µs for positive output voltages and 3.5µs for negative output voltages. When the output is well below regulation, however, the off-time is increased to 5µs to provide soft-start during start-up. The switching frequency, which depends upon the load, can be as high as 300kHz.

Shutdown Mode

When $\overline{SHDN}$ is low, the MAX629 enters shutdown mode. In this mode, the feedback and control circuit, reference, and internal biasing circuitry turn off. The shutdown current drops to less than 1µA. $\overline{SHDN}$ is a logic-level input; connect it to V_{CC} for normal operation.

The output voltage behavior in shutdown mode depends on the output voltage polarity. In the positive output voltage configuration (Figure 2), the output is directly connected to the input through the diode (D1) and the inductor (L1). When the device is in shutdown mode, the output voltage falls to one diode drop below the input voltage, and any load connected to the output may still conduct current. In the negative output voltage configuration (Figure 3), there is no DC connection between the input and the output, and in shutdown mode the output is pulled to GND.

Design Procedure

Setting the Output Voltage

For either positive or negative output voltage applications, set the MAX629's output voltage using two external resistors, R1 and R2, as shown in Figures 2 and 3. Since the input bias current at FB has a 50nA maximum value, large resistors can be used in the feedback loop

28V, Low-Power, High-Voltage, Boost or Inverting DC-DC Converter

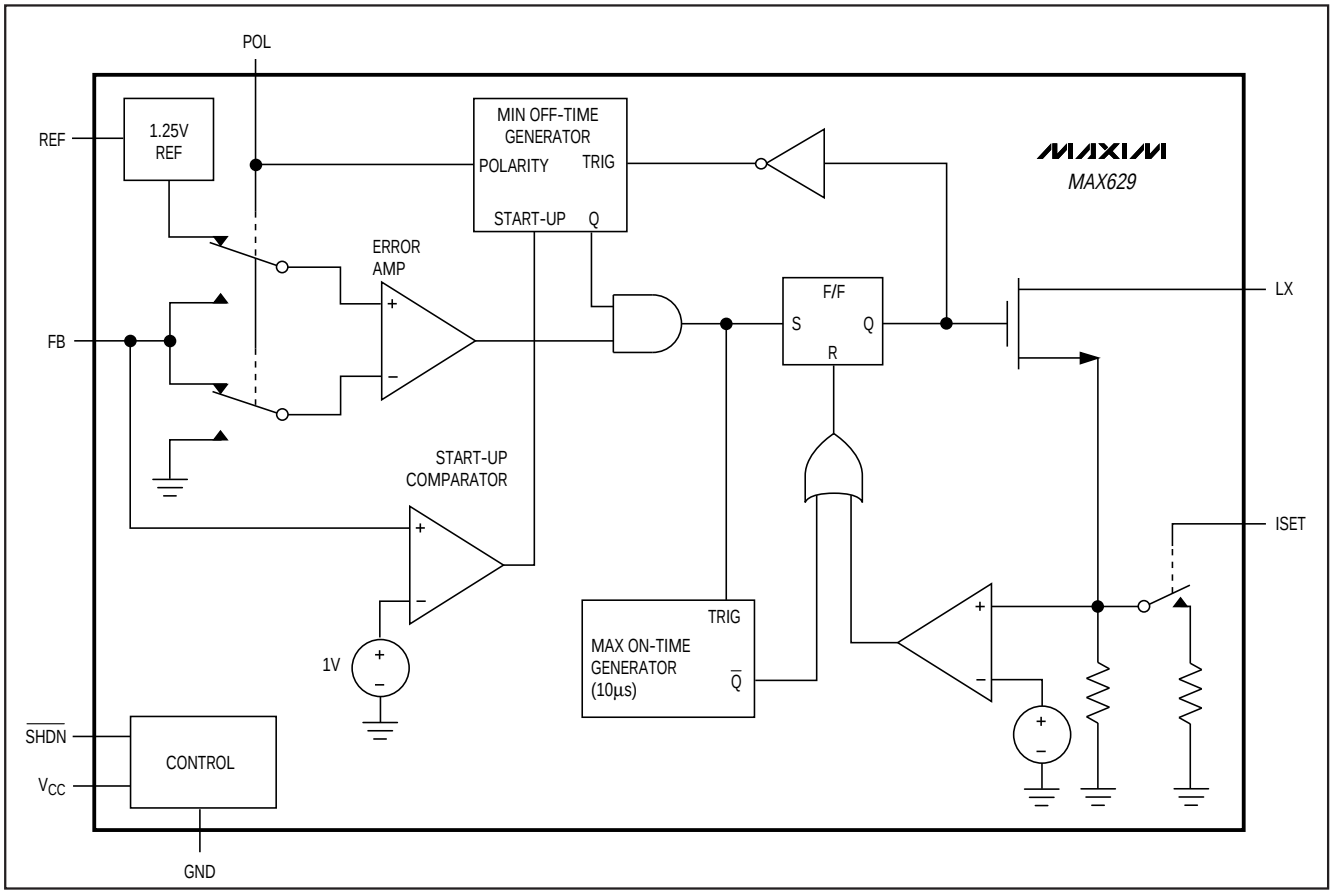

Figure 1. Functional Diagram

without a significant loss of accuracy. Begin by selecting R2 to be in the 10kΩ to 200kΩ range, and calculate R1 using the applicable equation from the following subsections.

Positive Output Voltages

For positive output voltages, use the typical boost configuration shown in Figure 2, connecting POL to GND. This sets the threshold voltage at FB to equal V_{REF}. Choose the value of R2 and calculate R1 as follows:

$$R1 = R2 \times \left(\frac{V_{OUT}}{V_{REF}} - 1 \right)$$

where V_{REF} = 1.25V.

Negative Output Voltages

For negative output voltages, configure R1 and R2 as shown in Figure 3, connecting POL to V_{CC}. This sets the FB threshold voltage to GND so that negative voltages can be regulated. Choose R2 and calculate R1 as follows:

$$R1 = R2 \times \frac{|V_{OUT}|}{V_{REF}}$$

where V_{REF} = 1.25V.

Figure 3 demonstrates generation of a negative output voltage by following the MAX629 with an inverting charge pump. This configuration limits $|V_{OUT}|$ to values between $-|V_{IN}|$ and -28V. If smaller negative output voltages are required, D2's cathode can be connected to V_{IN}. This alternative configuration permits output voltages smaller than $-|V_{IN}|$, but cannot be used for output voltages more negative than $-|28V - V_{IN}|$. It produces roughly one-half the output current as the standard configuration and is typically 5% less efficient.

Setting the Current Limit

External current-limit selection provides added control over the MAX629's output performance. A higher current limit increases the amount of energy stored in the inductor during each cycle, which provides a higher output current capability. For higher output current applications, choose the 500mA current-limit option by connecting ISET to V_{CC}. When lower output current is required, the 250mA current limit can provide several advantages. First, a smaller inductor can be used, which saves board area and cost. Second, the smaller energy transfer per cycle reduces output ripple for a given capacitor, providing design flexibility between board area, cost, and output ripple by allowing cheaper, higher-ESR capacitors. Connect ISET to GND to select the 250mA current-limit option.

Inductor Selection

The MAX629's high switching frequency allows for the use of a small inductor. The 47µH inductor shown in the *Typical Operating Circuit* is recommended for most applications. Larger inductances reduce the peak inductor current, but may limit output current capability at low input voltages and provide slower start-up times. Smaller inductances require less board space, but may cause greater peak current due to current-sense comparator propagation delay. If input voltages below 2V will be common, reducing the inductance to 22µH might improve performance; however, maximum load current and efficiency may decline. It is important to thoroughly test operation under all input and output conditions to ensure proper component selection.

Inductors with a ferrite core or equivalent are recommended; powder iron cores are not recommended for use with high switching frequencies. The inductor's incremental saturation rating must exceed the selected current limit. For highest efficiency, use an inductor with a low DC resistance (under 100mΩ). See Table 1 for a list of inductor suppliers.

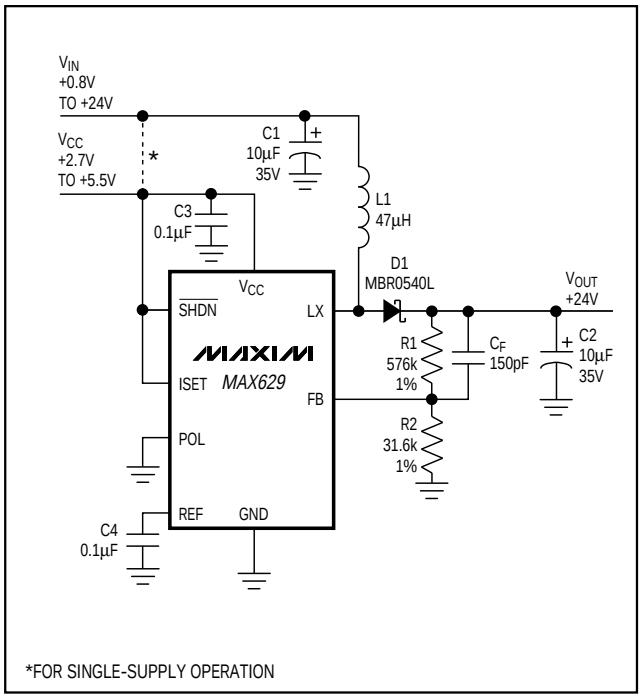

Figure 2. +24V for a Positive LCD Bias

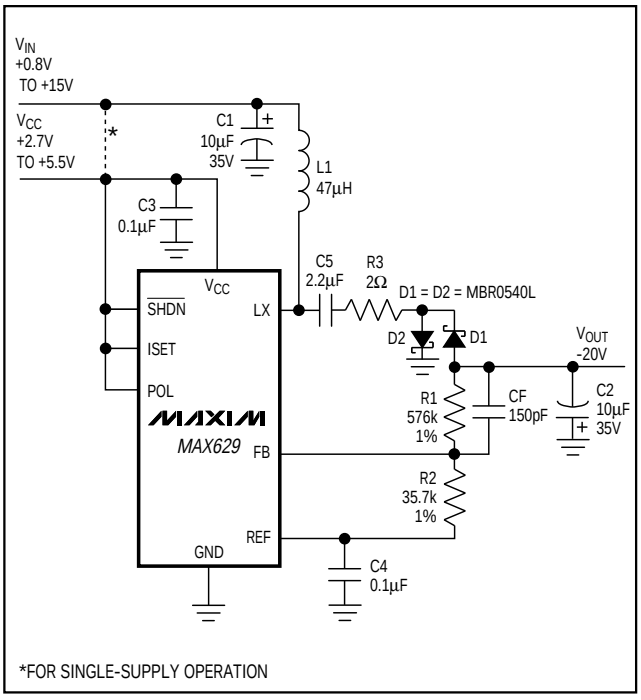

Figure 3. -20V for a Negative LCD Bias

28V, Low-Power, High-Voltage, Boost or Inverting DC-DC Converter

Diode Selection

The MAX629's high switching frequency demands a high-speed rectifier. Schottky diodes, such as the 1N5819 or MBR0530L, are recommended. Make sure that the diode's peak current rating exceeds the peak current set by ISET, and that its breakdown voltage exceeds the output voltage. Schottky diodes are preferred due to their low forward voltage. However, ultra-high-speed silicon rectifiers are also acceptable. Table 1 lists Schottky diode suppliers.

Capacitor Selection

Output Filter Capacitor

The primary criterion for selecting the output filter capacitor is low effective series resistance (ESR). The product of the peak inductor current and the output filter capacitor's ESR determines the amplitude of the high-frequency ripple seen on the output voltage. These requirements can be balanced by appropriate selection of the current limit, as discussed in the S*etting the Current Limit* section. Table 1 lists some low-ESR capacitor suppliers. See the Output Voltage Ripple graph in the *Typical Operating Characteristics* section.

Input Bypass Capacitor

Although the output current of many MAX629 applications may be relatively small, the input must be designed to withstand current transients equal to the inductor current limit. The input bypass capacitor reduces the peak currents drawn from the voltage source, and reduces noise caused by the MAX629's switching action. The input source impedance determines the size of the capacitor required at the input (V_{IN}). As with the output filter capacitor, a low-ESR capacitor is recommended. A 10µF, low-ESR capacitor is adequate for most applications, although smaller bypass capacitors may also be acceptable. Bypass the IC separately with a 0.1µF ceramic capacitor placed as close as possible to the V_{CC} and GND pins.

Table 1. Component Suppliers

SUPPLIER	PHONE	FAX
CAPACITORS		
AVX: TPS series	(803) 946-0690	(803) 626-3123
Matsuo: 267 series	(714) 969-2491	(714) 960-6492
Sprague: 595D series	(603) 224-1961	(603) 224-1430
DIODES		
Motorola: MBR0530L	(602) 303-5454	(602) 994-6430
Nihon: EC11 FS1 series	(805) 867-2555	(805) 867-2698
INDUCTORS		
Coilcraft: DO1608 and DT1608 series	(847) 639-6400	(847) 639-1469
Murata-Erie: LQH4 series	(814) 237-1431	(814) 238-0490
Sumida: CD43, CD54, and CDRH62B series	(847) 956-0666	(847) 956-0702
TDK: NLC565050 series	(847) 390-4373	(847) 390-4428

Reference Capacitor

Bypass REF to GND with a 0.1µF ceramic capacitor for REF currents up to 10µA. REF can source up to 100µA of current for external loads. For 10µA ≤ I_{REF} ≤ 100µA, bypass REF with a 0.47µF capacitor.

Feed-Forward Capacitor

Parallel a capacitor (C_F) across R1 to compensate the feedback loop and ensure stability (Figures 2 and 3). Values up to 270pF are recommended for most applications. Choose the lowest capacitor value that ensures stability; high capacitance values may degrade line regulation.

Applications Information

Adjusting the Output Voltage

Many biasing applications require an adjustable output voltage, which is easily obtained using the configuration in Figure 4. In this circuit, an external bias voltage (which may be generated by a potentiometer, a DAC, or other means) is coupled to FB through the resistor R_B. The output voltage of this circuit is given by:

$$V_{OUT} = V_{INIT} + \frac{R1}{R_B}(V_{FB} - V_{BIAS})$$

where V_{INIT} is the fixed output voltage as calculated in the section *Setting the Output Voltage*, and V_{FB} is equal to either V_{REF} (1.25V) for the positive configuration or 0V for the negative configuration. Proper choice of R_B provides a wide range of available output voltages using simple external components to generate V_{BIAS}.

Input Voltage Range

Although, in many cases, the MAX629 and the inductor are powered from the same source, it is often advantageous in battery-powered applications to power the device from an available regulated supply and to power the inductor directly from a battery. The MAX629 requires a +2.7V to +5.5V supply at V_{CC}, but the inductor can be powered from as low as +0.8V, significantly

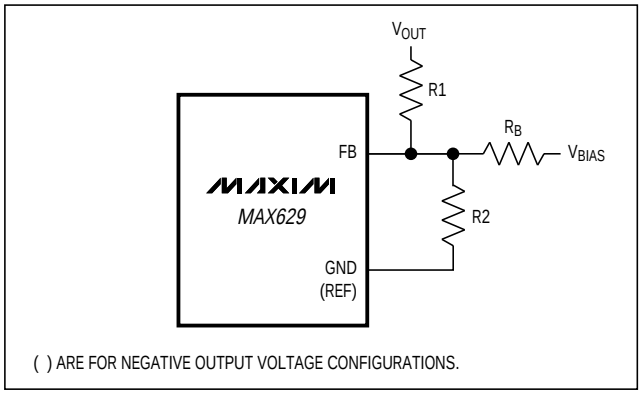

Figure 4. Adjustable Output Voltage

increasing usable battery life. Using separate supplies for V_{CC} and V_{IN} also reduces noise injection onto V_{CC} by isolating it from the switching transients, allowing a smaller, less-expensive input filter capacitor to be used in many applications. If input voltages below 2V will be common, reducing the inductor to 22µH may improve performance in this voltage range, at the potential cost of some decrease in maximum load current and efficiency.

In the negative configuration shown in Figure 3, the inverting charge pump injects current into LX with each cycle. The amount of charge injected increases at higher V_{IN}, and may prematurely trip the internal current-limit threshold. Resistor R3 increases the usable input voltage range by limiting the peak injected current. The 2Ω resistor shown provides a usable input voltage range beyond V_{IN} = 15V. In applications with a different input voltage range, R3 may be increased or decreased as necessary, with a resulting efficiency change of roughly 0.5%/Ω.

Layout Considerations

Proper PC board layout is essential due to high current levels and fast switching waveforms that radiate noise. It is recommended that initial prototyping be performed using the MAX629 evaluation kit or equivalent PC board-based design. Breadboards or proto-boards should never be used when prototyping switching regulators.

It is important to connect the GND pin, the input bypass-capacitor ground lead, and the output filter-capacitor ground lead to a single point (star ground configuration) to minimize ground noise and improve regulation. Also, minimize lead lengths to reduce stray capacitance, trace resistance, and radiated noise, with preference given to the feedback circuit, the ground circuit, and LX. Place R1 and R2 as close to the feedback pin as possible. Place the input bypass capacitor as close as possible to V_{CC} and GND.

Refer to the MAX629 evaluation kit data sheet for an example of proper board layout.

28V, Low-Power, High-Voltage, Boost or Inverting DC-DC Converter

Pin Configuration

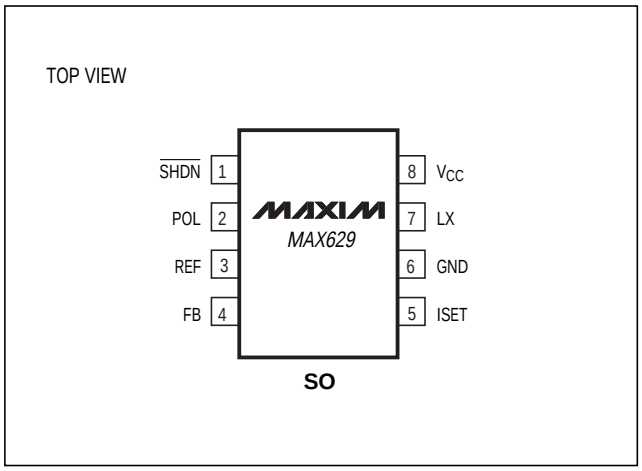

Chip Information

TRANSISTOR COUNT: 653

SUBSTRATE CONNECTED TO GND

Package Information

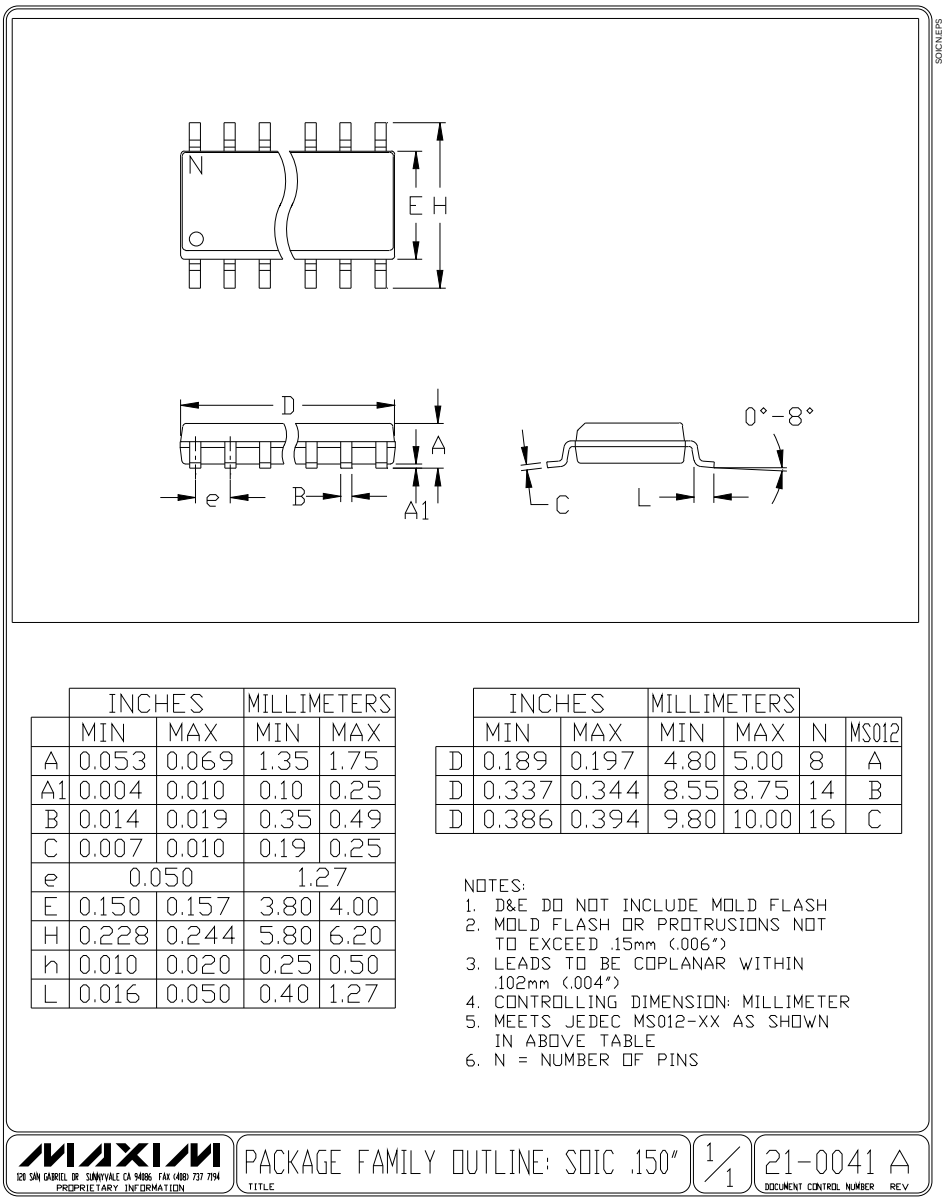

	INCHES		MILLIMETERS	
	MIN	MAX	MIN	MAX
A	0.053	0.069	1.35	1.75
A1	0.004	0.010	0.10	0.25
B	0.014	0.019	0.35	0.49
C	0.007	0.010	0.19	0.25
e	0.050		1.27	
E	0.150	0.157	3.80	4.00
H	0.228	0.244	5.80	6.20
h	0.010	0.020	0.25	0.50
L	0.016	0.050	0.40	1.27

	INCHES		MILLIMETERS			
	MIN	MAX	MIN	MAX	N	MS012
D	0.189	0.197	4.80	5.00	8	A
D	0.337	0.344	8.55	8.75	14	B
D	0.386	0.394	9.80	10.00	16	C

NOTES:
1. D&E DO NOT INCLUDE MOLD FLASH
2. MOLD FLASH OR PROTRUSIONS NOT TO EXCEED .15mm (.006")
3. LEADS TO BE COPLANAR WITHIN .102mm (.004")
4. CONTROLLING DIMENSION: MILLIMETER
5. MEETS JEDEC MS012-XX AS SHOWN IN ABOVE TABLE
6. N = NUMBER OF PINS

MAXIM 120 SAN GABRIEL DR. SUNNYVALE CA 94086 FAX (408) 737 7194 PROPRIETARY INFORMATION

PACKAGE FAMILY OUTLINE: SOIC .150" (TITLE)

1/1

21-0041 A (DOCUMENT CONTROL NUMBER REV.)

NOTES